DELTA PREVENTION

ROOF FALL PROTECTION
SOLUTIONS & EQUIPMENT

ECOLLECTIVE
Fall Protection

INDEX

3 They trusted us

4 Freestanding guardrails: The fall protection solution chosen by thousands of companies

5 Discover the VSS System

6 Ecological Report

7 Freestanding Guardrails

11 VSS SafetyLine Permanent Warning Line

13 Guardrails for Access Ladder

15 Guardrails for Roof Access Hatch

17 Guardrails for Skylights

19 Ladder stabilizer system

22 Standards

23 Warranty

24 Additional Services

25 Quote Request Form

ABOUT DELTA PREVENTION

Delta Prevention is a Canadian manufacturer of permanent, versatile and collective fall prevention solutions. All our equipment is designed and manufactured to save lives and maintain the integrity of your building while respecting the environment. The only manufacturer to offer you an ECOLLECTIVE fall protection, Delta Prevention is proud to manufacture its products in Canada with eco-responsible and locally sourced materials. Beyond the equipment, we pay unique attention to our users, the workers who risk their lives every day working a few steps from the edge. For them, we develop products that exceed industry standards in terms of durability, safety and use.

OUR MISSION:

Provide companies with collective and permanent fall protection solutions that enable them to make their workplaces safe while preserving the integrity of their infrastructure.

OUR VISION:

Saving lives by securing industrial, commercial and institutional infrastructure with eco-responsible and innovative solutions.

THEY TRUSTED US

« System well thought-out, easy to install and durable because it's made of aluminum. It saves time and increases efficiency when it's time to start and complete repair or maintenance work of the equipment. »

Roch Beaulieu, OHS Manager

« Agropur chose the Delta Prevention certified distributor to improve safety on their rooftops. First of all, the team impressed us with its fast response, its professionalism, its wise advice and its very competitive offer. We were very satisfied with the installation service and by the communication. The team was proactive and found solutions for every challenge, from the quote to the installation. Thank you for supporting us in this project! »

Yohann Archambault, Projects Manager

« The Delta Prevention certified distributor took charge of the project autonomously and professionally. The installation was done in time and their representatives were very available to us. »

Marie-Ève Proulx, OHS Supervisor

« When Confab Laboratories wanted to improve safety on its rooftops, the Delta Prevention certified distributor identified our needs in a clear and specific roof survey. The team was effective and installed the railings on the scheduled date. The project team was present from the quote to the post-installation visit. »

Stéphane Cesaria, P. Eng.

SOLUTIONS FOR ALL INDUSTRIES

Food industry

Industrial

Institutional

Aerospace

Mining

Telecommunication

FREESTANDING GUARDRAILS: THE FALL PROTECTION SOLUTION CHOSEN BY THOUSANDS OF COMPANIES

When working at heights, wearing a harness is often the recommended solution. But did you know that the first step should be to question the task itself? If it's impossible to eliminate the risk at the source, a logical sequence of solutions must be evaluated: here is the hierarchy of fall protection.

1

Hazard Elimination

Preferred solution is to eliminate exposure to the fall hazard.

2

Passive Fall Protection

Physical barriers, such as guardrails around unprotected edges and covers over holes.

3

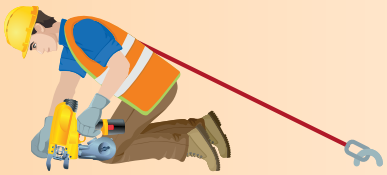

Fall Restraint Systems

Use personal protective equipment to restrict the worker's range of movement so they cannot fall.

4

Fall Arrest Systems

Use personal protective equipment to arrest a fall within acceptable force and clearance margins.

5

Administrative Controls

Least preferred solution is utilizing work practices or procedures that increase a worker's awareness of a fall hazard.

WHY CHOOSE US? DISCOVER THE *VSS SYSTEM*

These are the common values for all VSS fall protection solutions.
All share the same DNA and can be described by the same word: innovative!

ECO-CONSCIOUS

- Recycled rubber
- Eco-friendly
- Canadian aluminium
- Components from local sources

DURABILITY

- DeltaMax™ Base made from recycled rubber
- High adhesion to roof membrane
- Can be installed directly on the membrane
- Molded handle for easy transport
- Anodized 6061-T6 aluminium railing
- Ultimate resistance to corrosion

Versatile Safety System

VERSATILE

- Shared components between configurations
- Possibility to convert warning line into guardrail.
- Flexible and modular system adapted to your needs
- Compatible with every type of flat roof

PRESERVES YOUR BUILDING

- Corrosion resistant and no rust stain on the membrane
- No cracking and spilling of the filling material
- No risk of peeling paint
- Non-abrasive material, safe for the membrane

ECOLLECTIVE
Fall Protection

Delta Prevention is the first manufacturer to offer you a collective and eco-conscious fall protection system.

- Recycled rubber
- Locally sourced material
- Produced from clean energy

ECOLOGICAL REPORT

COMMITTED TO REDUCING OUR ECOLOGICAL FOOTPRINT.

Our green shift is real! As an environmentally conscious manufacturer, our ecological vision applies to every sector of the company. An ecological report will be provided for each project so that you too can be proud to have contributed to the purchase of responsible equipment.

WHY DID WE CHOOSE RECYCLED RUBBER FOR THE CREATION OF OUR PATENTED COUNTERWEIGHT BASE?

3 recycled truck tires in each base

51,273 tires recycled since the creation of Delta Prevention

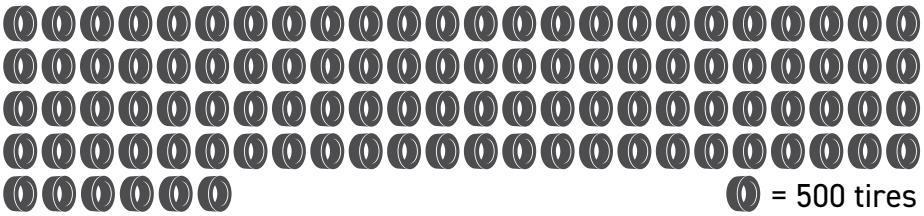

= 500 tires

CLEAN ENERGY PRODUCT

Country of manufacture			
Main energy source	Hydroelectricity	Natural gas/oil	Coal

A MINIMAL CARBON FOOTPRINT

Distance travelled (km)*

CO_2 emission (tonne)**

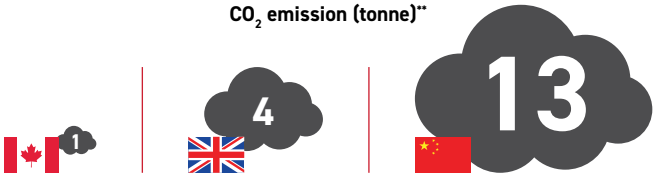

* To ship the equivalent of a container of bases to Toronto
** Per 67.5 m^3 container

BACK TO EARTH

204 trees will be planted to offset our CO_2 emissions.

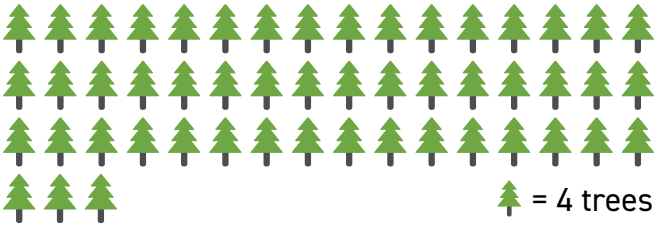

= 4 trees

GIVE BACK TO SOCIETY

91% of expenditures are reinvested in the Canadian economy

FREESTANDING GUARDRAILS

The roof guardrail system from Delta Prevention is extremely popular for permanently eliminating your roof fall hazards. Thanks to multiple configurations available, they are the most versatile on the market.

SEE IT ON YouTube

FEATURES

- No damage to the roof because 100% freestanding
- Aluminum tubing prevents peeling paint
- High adhesion recycled rubber base that can be installed directly on the membrane
- Ultimate resistance to rust and deterioration caused by rain, temperature changes and acidic environments
- Quick and easy installation on roofs with or without parapet
- Compliance report included
- 10 year warranty
- Made in Canada
- Complies with NBC, OBC, Worksafe BC and OSHA standards

VSS CLASSIC

Linear configuration to secure between a minimum of 10 feet up to your entire perimeter without any return. Can be installed at an angle to lower the visual impact on your building.

The best choice for:
- Long sections
- Roof without parapet
- Unobtrusive appearance (low profile bases)

Application:
- Medium-large HVAC
- Access ladder protection

VSS COMPACT

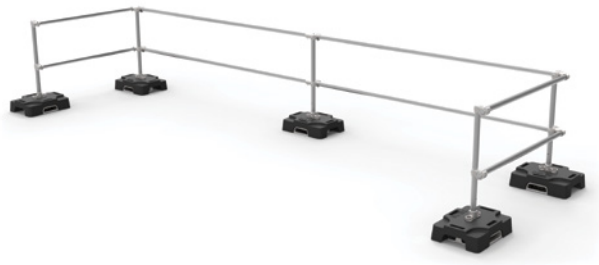

Ideal configuration when floor space is reduced between the units to be protected and the parapet. A return of only 5 feet is required at each end, regardless of length, and at 40 foot intervals when there is no parapet.

The best choice for:
- Restricted space
- Use with permanent warning line
- Closed perimeter
- Temporary installation

Application:
- Snow chutes
- Small HVAC
- Skylights

TYPES OF INSTALLATION

VSS CLASSIC

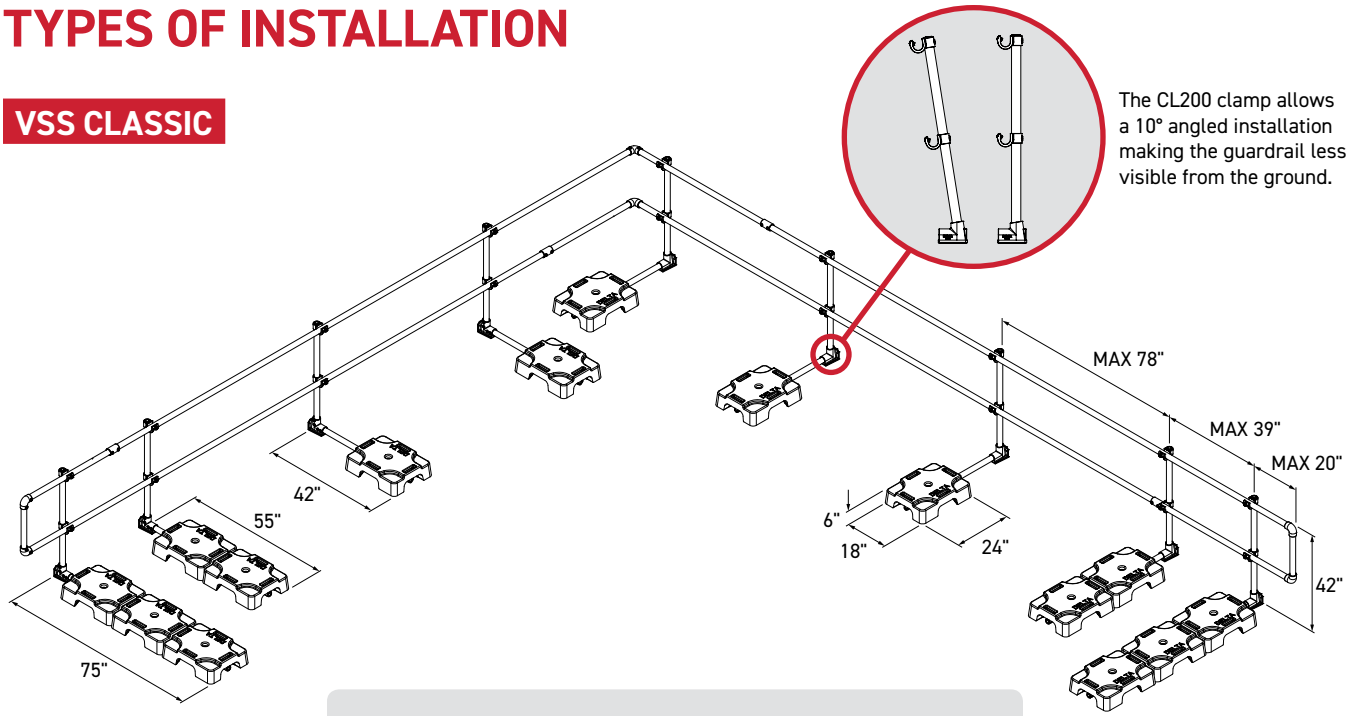

Note :

- The "D" finish allows a maximum extension of 20 inches.
- The ends of the VSS Classic system are always composed of a DCS-3 and a DCS-2, located 39 inches apart.
- The measurements shown represent the maximum lengths between two vertical posts (78").
- Must be installed at 12" from the edge when there is no parapet.

VSS COMPACT

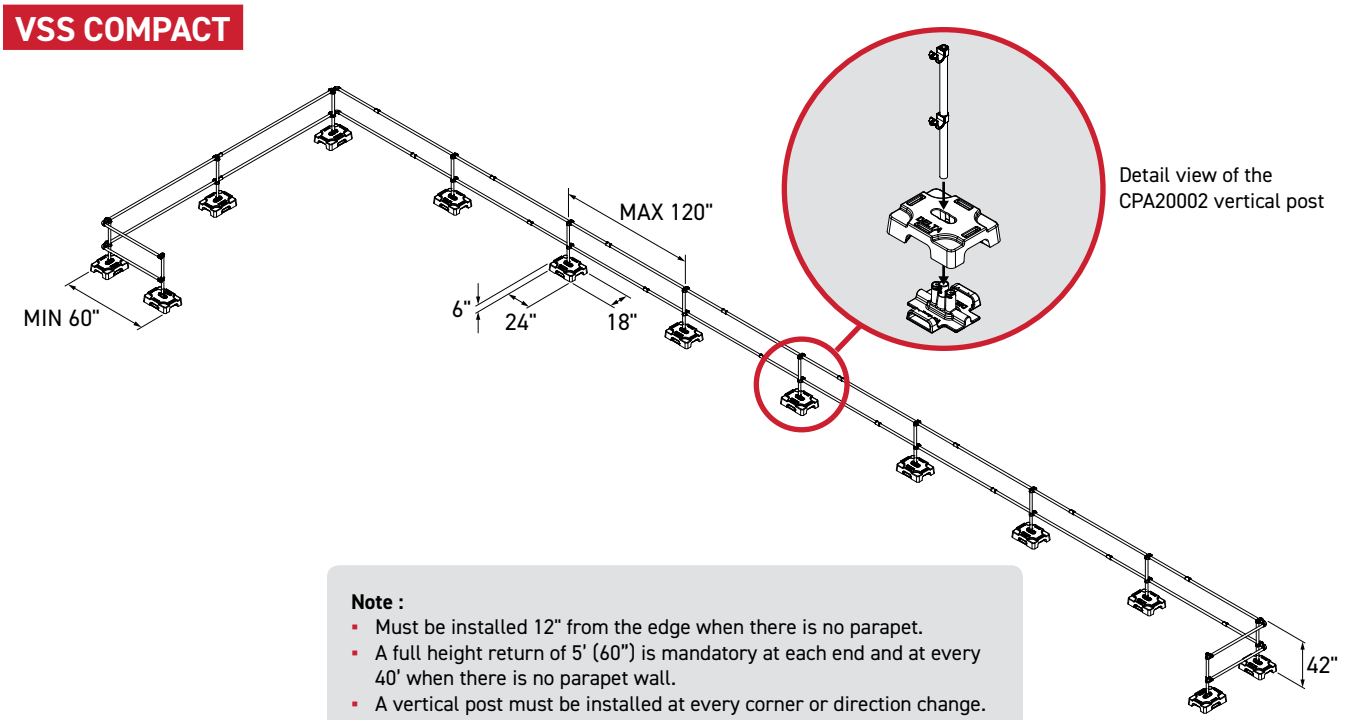

Note :

- Must be installed 12" from the edge when there is no parapet.
- A full height return of 5' (60") is mandatory at each end and at every 40' when there is no parapet wall.
- A vertical post must be installed at every corner or direction change.
- The measurements shown represent the maximum lengths between two vertical posts (120").

TECHNICAL SHEET

	VSS Classic	VSS Compact
Minimum length:	120"	120"
Height:	42"	42"
Max distance between upright:	78"	120"
Full height return:	none required	at each end and at each 40' on roofs without parapet wall
Counterweight:	50 lb/base	50 lb/base
Counterweight dimensions:	24" x 18" x 6"	24" x 18" x 6"
Counterweight material:	recycled rubber	recycled rubber, galvanized cast iron with rubber mat
Railing & upright material:	6061-T6 anodized aluminum	6061-T6 anodized aluminum
Railing & upright OD:	1,9"	1,9"
Junction & clamp material:	galvanized steel	galvanized steel
Hardware material:	stainless steel	stainless steel
Set screw torque:	30 lb/ft (except CL201: 20 lb/ft)	30 lb/ft (except CL201: 20 lb/ft)
Compatibility with VSS SafetyLine:	yes	yes
Usage:	permanent, temporary	permanent, temporary
Design patent:	#162620	#162620
Complies with:	RSST: 12 NBC: 4.1.5.14 OSHA: 1926.502, 1926.501 Ontario Building Code: 4.1.5.14 WorkSafeBC: 11.2	RSST: 12 NBC: 4.1.5.14 OSHA: 1926.502, 1926.501 Ontario Building Code: 4.1.5.14 WorkSafeBC: 11.2
Warranty:	10 year	10 year

ACCESSORIES

Self-closing safety gate
ITEM: GAT24A02
Material: Aluminium

Variable angle clamp
ITEM: GA125-01
Material: Galvanized steel

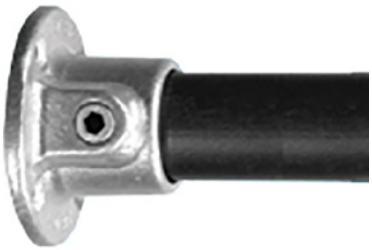

Wall mount
ITEM: GA131-01
Material: Galvanized steel

Toe board - VSS Classic
ITEM: BAA19-01
Material: Aluminium

COMMON APPLICATIONS

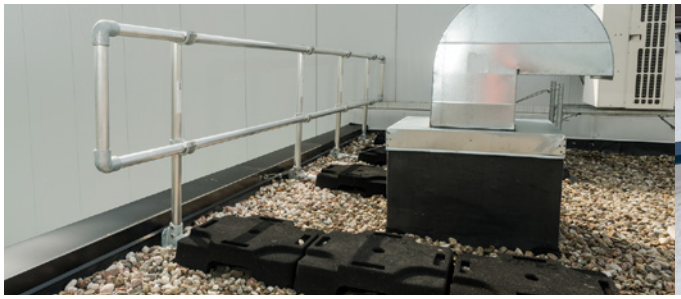

HVAC unit - VSS Classic

Roof drain - VSS Compact

TPO roof - VSS Compact

Ballasted roof - VSS Classic

Roof drains - VSS Classic

Access staircase - VSS Classic

Sloping roof - VSS Classic

HVAC unit - VSS Compact

HVAC unit - VSS Compact

Roof with angle - VSS Classic

VSS SAFETYLINE
PERMANENT WARNING LINE

The VSS SafetyLine is a warning line system used to delineate a safe working area away from fall hazards. The VSS SafetyLine is 100% compliant with the OSHA and provincials permanent warning line standards.

SEE IT ON YouTube

FEATURES

- Permanent delineation of a safety perimeter
- Modular: can be combined with Delta Prevention guardrails to secure the entire roof at a low cost
- Scalable: can be converted into a guardrail
- Freestanding: 100% without penetration
- Quick and easy installation
- Complies with OSHA, RSST and other provincials permanent warning line standards
- Compliance report included
- 10-year warranty

MAIN COMPONENTS

Weighted base clamp

Nylon-coated steel cable and high visibility flag

Recycled rubber base

Solid mounting with carabiners

THE IDEAL ADDITION TO DELTA PREVENTION GUARDRAILS

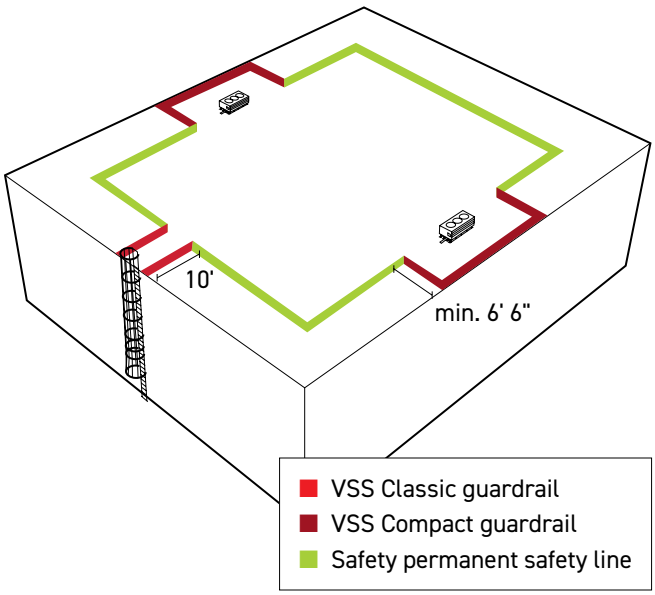

TYPES OF INSTALLATION

RSST - QUEBEC STANDARDS

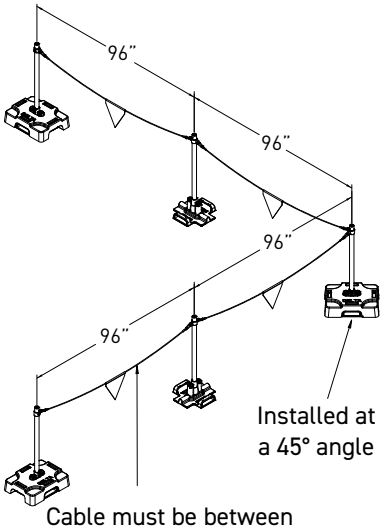

Cable must be between
27½" and 39" from the ground

OSHA - CANADA/USA STANDARDS

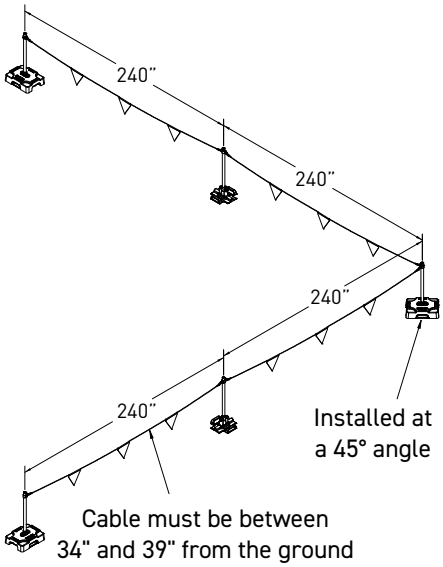

Cable must be between
34" and 39" from the ground

TYPES OF CONNECTION

TYPE G

The warning line is connected to a guardrail or wall anchor at both ends. A rubber counterweight must be added at each corner and positioned at 45°.

TYPE S

The warning line is connected to a guardrail or wall anchor at one end only. A rubber counterweight must be added at:

- the non-connected end.
- each corner and positioned at 45°.

TYPE N

The warning line is not connected to any end. A rubber counterweight must be added at:

- both ends.
- each corner and positioned at 45°.

TECHNICAL SHEET

	RSST - Quebec Standards	OSHA - Canada/USA Standards
Maximum distance between poles:	96"	240"
Maximum cable height allowed:	39" from the ground	39" from the ground
Minimum cable height allowed:	27½" from the ground	34" from the ground
Cable - Material:	steel, yellow nylon coating	steel, yellow nylon coating
Cable - Diameter:	¼"	¼"
Flag - Material:	yellow nylon	yellow nylon
Maximum distance between each flag:	72"	72"
Counterweight:	50 lb/base	50 lb/base
Counterweight – Material:	recycled rubber, galvanized cast iron with rubber mat	recycled rubber, galvanized cast iron with rubber mat
Tubing and posts:	Anodized aluminum 6061-T6	Anodized aluminum 6061-T6
Outside diameter:	1,9"	1,9"
Fittings – Material:	galvanized steel	galvanized steel
Hardware – Material:	stainless steel	stainless steel
Tightening Torque:	30 lb/ft (CL201: 20 lb/ft)	30 lb/ft (CL201: 20 lb/ft)
Use:	Permanent, temporary	Permanent, temporary
Design patent:	#162620	#162620
Warranty:	10 year	10 year
Complies with:	RSST: 354.1	OSHA: 1926.502(f)

COMPONENTS

Cable clamp
Terminates the cable after it has been cut to the correct length.

#ITEM: DAA27-01
Material: galvanized steel

Double connector
This dual connector connects two straight sections of a warning line.

ITEM: GA167-01
Material: galvanized steel

90° Connector
This connector connects two warning line sections and creates a 90° corner.

ITEM: GA168-01
Material: galvanized steel

Simple connector
This connector is used at the beginning and end of each permanent warning line. It can be installed on an independent vertical pole or on a Delta Prevention guardrail section.

ITEM: GA173-01
Material: galvanized steel

GUARDRAILS FOR ACCESS LADDER

The guardrail kit for access ladder improves safety around these very common access points. Delta Prevention has developed a set of guardrails that can be adapted to all ladders and type of roof.

FEATURES

- No damage to the roof, as 100% non-penetrating
- No cutting, quick and easy installation
- Can be installed on roofs with or without a parapet
- Anodized aluminum finish prevents paint peeling
- Recycled rubber base provides the best grip without additional sacrificial membrane
- Compliance report included
- Ultimate resistance to rust and deterioration caused by rain, temperature changes and acidic environments
- 10-year warranty*

VSS CLASSIC INSTALLATION

Access ladders going up or down a roof of more than 10' high inevitably place you in a dangerous position as described in all standards. There is always a risk of losing balance when ascending or descending backwards in the ladder. Thanks to the access ladder guardrail, you can protect 10' (3 m) on each side of the access ladder, ensuring the safety of your operations.

VSS COMPACT INSTALLATION

The VSS Compact access ladder guardrail protects 10' on each side of the access ladder and creates a traffic corridor leading to the center of the roof. Because they share the same components, the VSS Safetyline permanent warning line connects perfectly to the access ladder guardrail to create flawless fall protection.

TYPES OF INSTALLATION

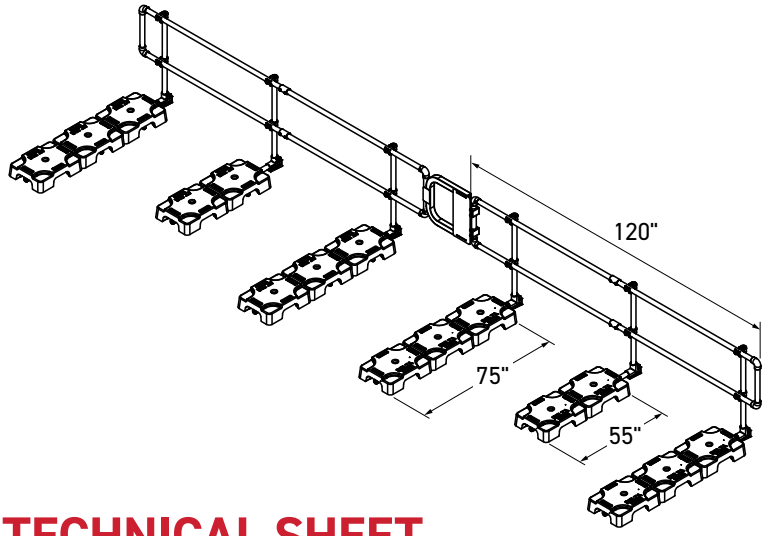

TECHNICAL SHEET

#ITEM LDK2CL01

Length:	10'/side
Height:	42"
Width:	75"
Counterweight:	50 lb/base
Counterweight material:	recycled rubber, galvanized cast iron with rubber mat
Railing & upright material:	6061-T6 anodized aluminum
Railing & upright OD:	1,9"
Junction & clamp material:	Galvanized steel
Hardware material:	Stainless steel
Set screw torque:	30 lb/ft (except CL201: 20 lb/ft)
Usage:	Permanent
Design patent:	#162620
Shipping weight:	1030 lb
Complies with:	RSST: 12 NBC: 4.1.5.1.4 OSHA : 1926.502, 1926.501 Ontario Building Code : 4.1.5.14 WorkSafeBC : 11.2

* Self-closing adjustable Safety Gate not included

ACCESSORIES

Self-closing adjustable Safety Gate

The adjustable safety fence adds extra protection by closing behind you after use, blocking access to the ladder. Opening: 22.75" – 34"

ITEM: GAT24A02
Material: Aluminum

PRE-CONFIGURATIONS

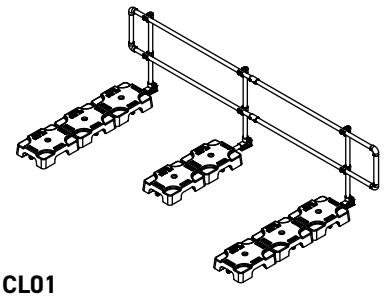

LDK1CL01
Kit for access ladder - 1 side (10')

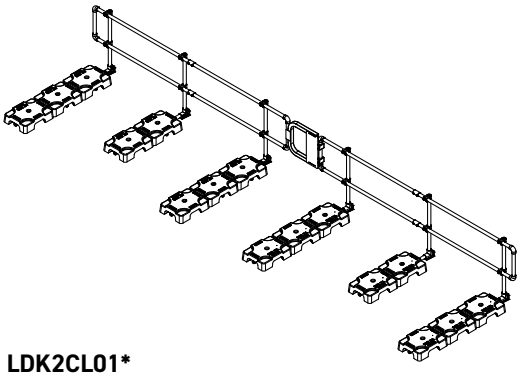

LDK2CL01*
Kit access ladder - 2 sides (2 x 10')

Connected with a CL101 junction

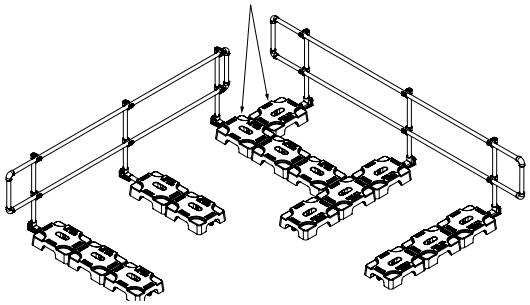

LADKIT-CL-2SC
Kit for access ladder - corner

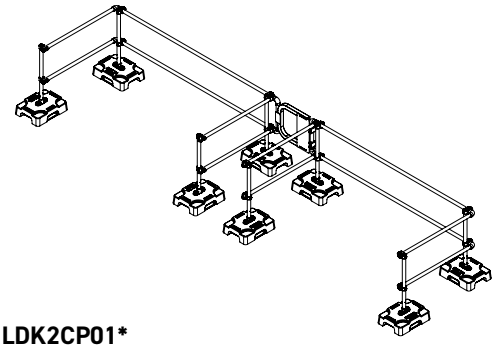

LDK2CP01*
Kit for access ladder - 2 sides (2 x 10')

GUARDRAILS FOR ROOF ACCESS HATCH

The roof hatch guardrail protects access to the hatch and provides handholds to increase safety entering or exiting the ladder. This guardrail also prevents falls into the hatch when it is left open.

FEATURES

- Adapts to access hatches of all sizes
- Attaches to the hatch without damaging the roof membrane
- Lightweight and rust resistant aluminum railing
- Self-closing adjustable safety gate included
- Quick and easy installation
- Compliance report included
- 10-year warranty*
- Made in Canada
- Complies with NBC, OSHA standards

HOW IT WORKS

Thanks to the design developed in-house exclusively for this application, the Delta Prevention's access hatch guardrail kit can be easily installed on access hatches of all styles and sizes. The clamp-on installation is safe for the membrane and is 100% penetration-free. The same clamp also allows for bolted installation if necessary.

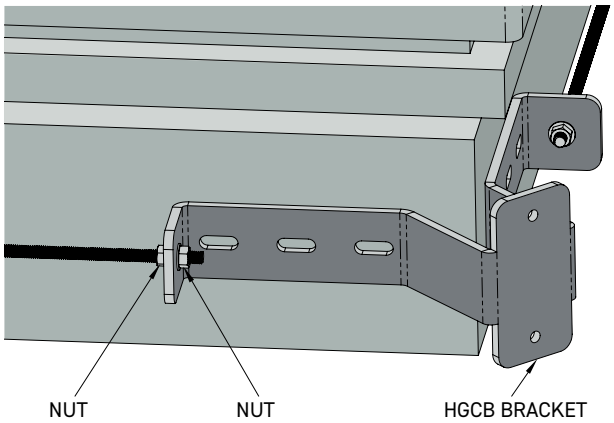

For access hatch with front access

For access hatch with lateral access

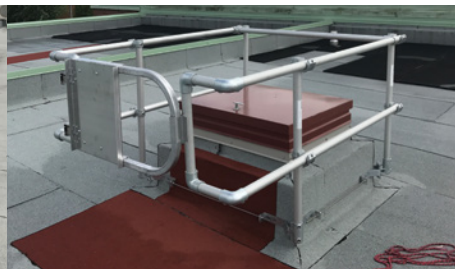

For overseiz access hatch with front access

TYPES OF INSTALLATION

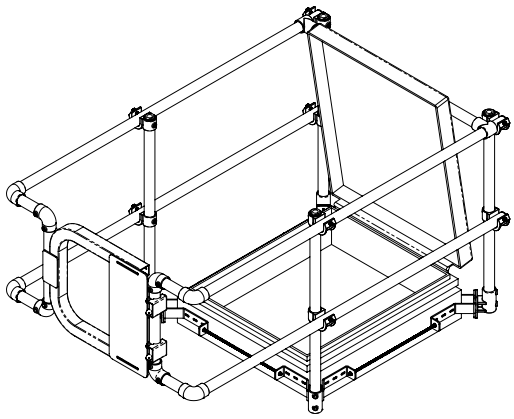

ITEM # HGKTSF01
Guardrail kit for front access hatch of 36" x 36" maximum

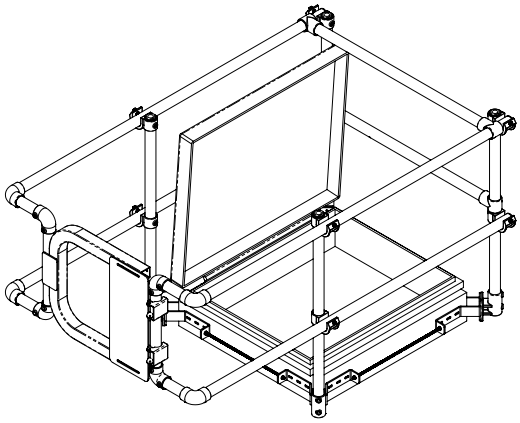

ITEM # HGKTSS01
Guardrail kit for side access hatch of 36" x 36" maximum

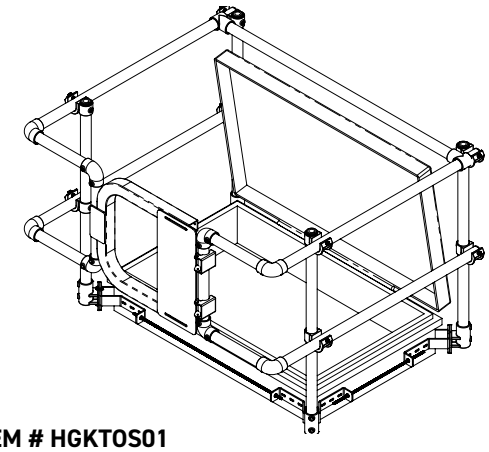

ITEM # HGKTOS01
Guardrail kit for oversized hatch with front access

TECHNICAL SHEET

ITEM # HGKTSF01

Overall length:	75"
Overall height:	42"
Width:	35.5"
Entry lock width:	30"
Ladder opening width:	24" - 36"
Railing & upright material:	6061-T6 anodized aluminum
Railing & upright OD:	1,9"
Junction & clamp material:	Galvanized steel
Hardware material:	Stainless steel
Set screw torque:	30 lb/ft (except CL201: 20 lb/ft)
Usage:	Permanent
Warranty:	10 year
Complies with:	RSST: 12 NBC: 4.1.5.14 OSHA: 1926.502, 1926.501 Ontario Building Code: 4.1.5.14 WorkSafeBC: 11.2

ACCESSORIES

Grab handle
The handle can be installed easily on the guardrail kit to further increase safety when exiting or entering the ladder.

ITEM: HGGBAR01
Material: Aluminum

GUARDRAILS FOR SKYLIGHTS

Installing a guardrail around skylights on your roof provides optimal safety for workers who need to visit the roof. In fact, according to NBC standard 2.9.2 and OSHA 1926.501(b)(4)(i), all working/walking surface must be protected by a guardrail, including skylights. Are you compliant?

FEATURES

- Tailor-made to your needs
- No damage to the roof because 100% non-penetrating
- Anodized aluminum railing
- Highly adherent recycled rubber base
- Can be installed directly on the membrane
- Ultimate resistance to rust and deterioration caused by rain, temperature changes and acidic environments
- Quick and easy installation
- Compliance report included
- 10-year warranty*
- Made in Canada
- Complies with NBC, OSHA standards

TWO POSSIBILITIES

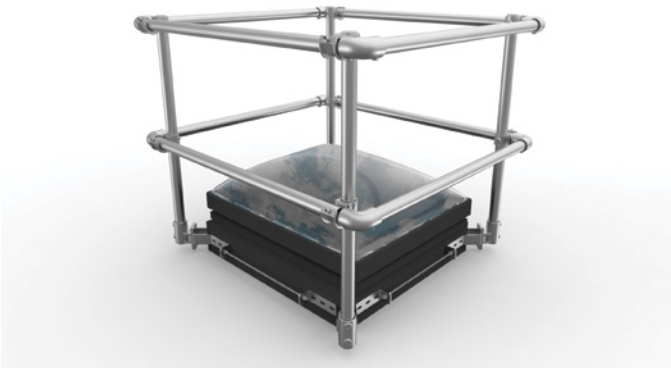

CLAMP STYLE

Economical and versatile, it can be installed on all skylights with a minimum vertical surface area of 2".

COUNTERWEIGHT STYLE

Simple and quick to install, it provides safety around your low-profile skylights or when it is impossible to install our clamping system.

TYPES OF INSTALLATION

Clamp-on system			On counterweight	
Up to 29" x 29"	**Up to 42" x 42"**	**Up to 62" x 62"**	**34" X 55" maximum**	**54" X 75" maximum**
SGTR2901	SGTR4201	SKYKIT-TR-62	SKYKIT-CW-55	SKYKIT-CW-75

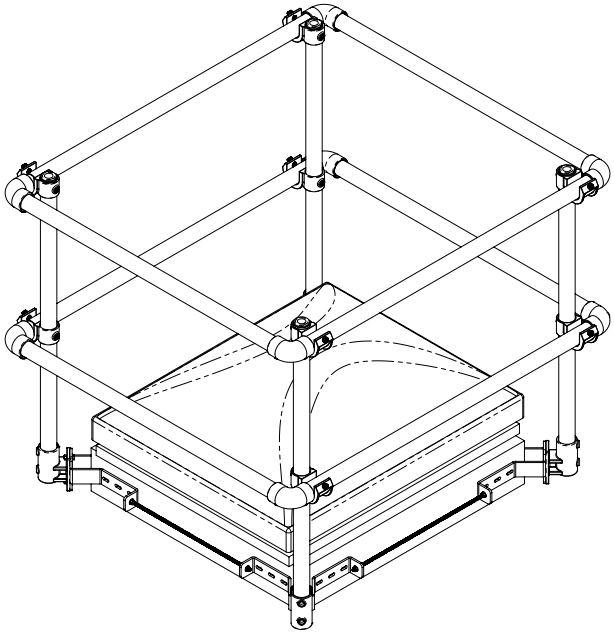

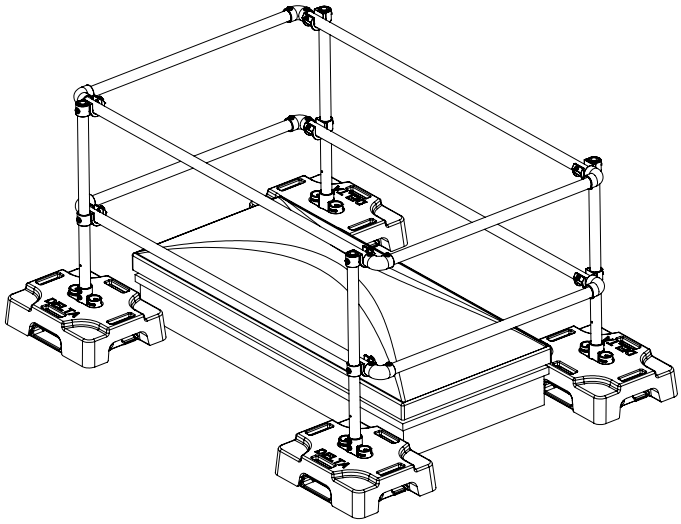

TECHNICAL SHEET

Height:	42"
Max distance between upright:	120"
Counterweight:	50 lb/base
Counterweight material:	Recycled rubber, galvanized cast iron with rubber mat
Railing & upright material:	6061-T6 anodized aluminum
Railing & upright OD:	1,9"
Junction & clamp material:	Galvanized steel
Hardware material:	Stainless steel
Set screw torque:	30 lb/pi (CL201: 20 lb/pi)
Usage:	Permanent, temporary
Design patent:	#162620
Complies with:	RSST: 12 NBC : 4.1.5.14 OSHA : 1926.502, 1926.501 Ontario Building Code : 4.1.5.14 WorkSafeBC : 11.2
Warranty:	10 year

LADDER STABILIZER SYSTEM

Delta Prevention's ladder stabilizer system is designed to create safe access to roofs accessible by an extension ladder. The versatile and patented system can be installed without anchoring in a few minutes on flat roofs with or without a parapet.

FEATURES

- 100% non-penetrating
- For roofs with or without parapet
- Lightweight, rust resistant aluminum pipes
- Steel stabilizer with anti-corrosion powder coating
- Quick and easy installation
- Patent Pending
- Permanent or temporary installation
- Made in Canada

APPLICATIONS

- HVAC maintenance
- Building or roof level without a fixed ladder or roof access hatch
- Roof access during construction

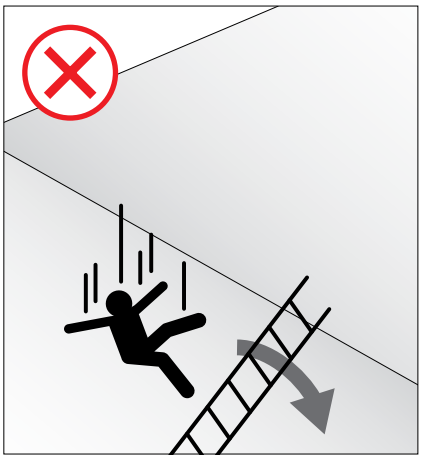

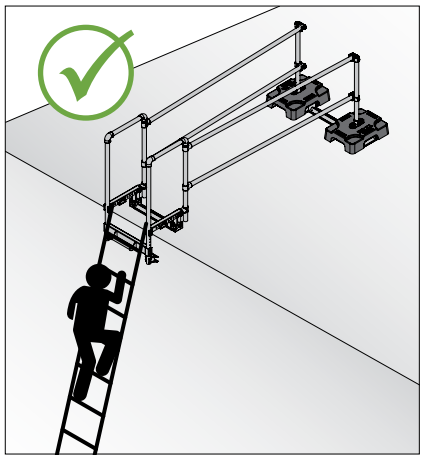

Hooks compatible with round or "D" shaped rungs up to 2" diameter.

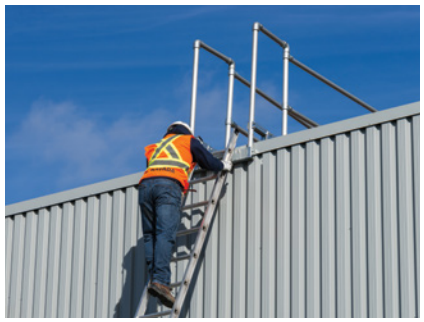

Hoops provide a solid grip and guardrails lead workers toward the center of the roof.

CONFIGURATION TYPES

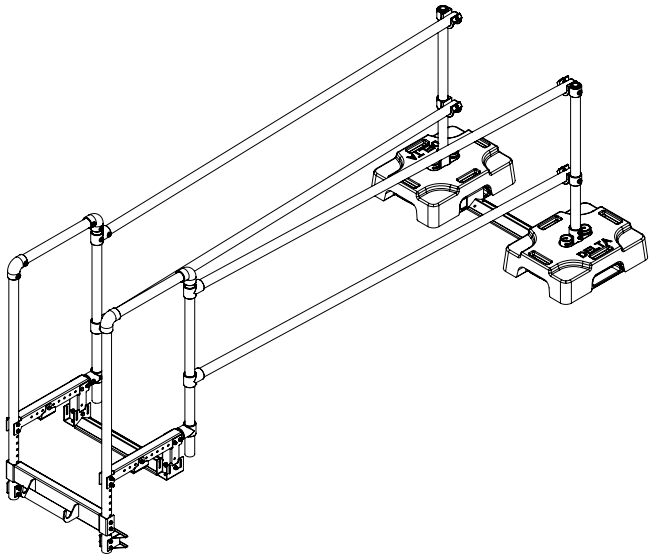

ITEM # LADPT101
Ladder Stabilizer System

ACCESSORIES

Self-closing safety gate

ITEM : GAT24A02
Material: Aluminum

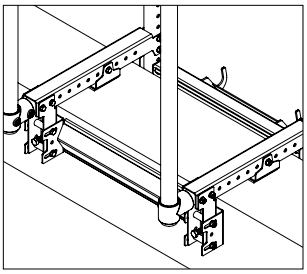

The adjustable clamp and adjustment screw allow precise installation on the parapet.

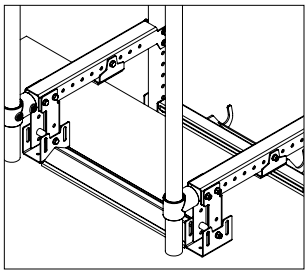

The clamp turns into a support point on roofs without a parapet wall.

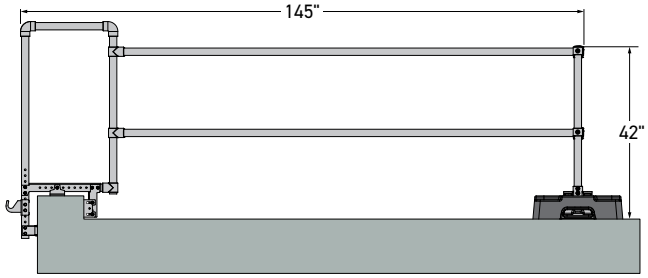

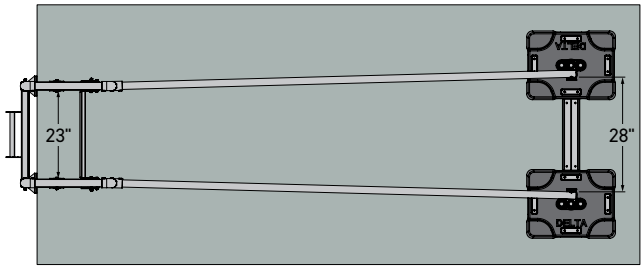

TECHNICAL SHEET

Total lenght:	145"
Height:	42"
Interior width - entry:	23"
Interior width - exit:	28"
Parapet - maximum width:	12"
Parapet - maximum height:	24" *
Parapet - minimum width:	6"
Material - stabilizer:	Powder coated steel with e-coat
Material - guardrail:	Anodized aluminum
Material - counterweights:	Recycled rubber, Galvanized cast iron
Weight - counterweights:	200 lb
Weight - total:	337.5 lb
Ladder - compatibility:	Aluminum, fiberglass
Ladder - compatible rung:	Round, "D" shaped
Ladder - Maximum rung diameter:	2"
Ladder - minimum inside width:	12"
Ladder - maximum side rail width:	4"

** For a parapet higher than 24", contact our customer service.*

STANDARDS

Delta Prevention meets and exceeds every Canadian fall protection standards for guardrails and warning line. Independently tested, all our fall protection system are engineered to meet or exceed every National or Provincial regulations when installed according to the manufacturer's Installation Guide.

Every systems is delivered with:

- Compliance Report
- Installation Guide
- 10 year Manufacturer's Warranty (ask us for more details)

NON PENETRATING GUARDRAIL STANDARD

Ontario fall protection regulation

Source: Canadian National Building Code & Ontario Building Code

4.1.5.14. Loads on Guards

(1) The minimum specified horizontal load applied inward or outward at the minimum required height of every required guard shall be,

(a) 3.0 kN/m for open viewing stands without fixed seats and for means of egress in grandstands, stadia, bleachers and arenas,

(b) a concentrated load of 1.0 kN applied at any point for access ways to equipment platforms, contiguous stairs and similar areas where the gathering of many people is improbable, and

(c) 0.75 kN/m or a concentrated load of 1.0 kN applied at any point, whichever governs for locations other than those described in Clauses (a) and (b).

(2) Individual elements within the guard, including solid panels and pickets, shall be designed for a load of 0.5 kN applied over an area of 100 mm by 100 mm located at any point in the element or elements so as to produce the most critical effect.

(3) The loads required in Sentence (2) need not be considered to act simultaneously with the loads provided for in Sentences (1) and (4).

(4) The minimum specified load applied vertically at the top of every required guard shall be 1.5 kN/m and need not be considered to act simultaneously with the horizontal load provided for in Sentence (1).

(5) For loads on handrails, refer to Sentence 3.4.6.5.(12).

BC fall protection regulations

Source:Worksafe BC

11.2 Obligation to use fall protection

(1) Unless elsewhere provided for in this Regulation, an employer must ensure that a fall protection system is used when work is being done at a place

(a) from which a fall of 3 m (10 ft) or more may occur, or

(b) where a fall from a height of less than 3 m involves a risk of injury greater than the risk of injury from the impact on a flat surface.

(2) The employer must ensure that guardrails meeting the requirements of Part 4 (General Conditions) or other similar means of fall restraint are used when practicable.

(3) If subsection (2) is not practicable, the employer must ensure that another fall restraint system is used.

(4) If subsection (3) is not practicable, the employer must ensure that one of the following is used:

(a) a fall arrest system;

(b) a rope access system that meets the requirements of Part 34.

(5) If subsection (4) is not practicable, or will result in a hazard greater than if a fall arrest system or a rope access system was not used, the employer must ensure that work procedures are followed that are acceptable to the Board and minimize the risk of injury to a worker from a fall.

(6) Before a worker is allowed into an area where a risk of falling exists, the employer must ensure that the worker is instructed in the fall protection system for the area and the procedures to be followed.

(7) A worker must use the fall protection system provided by the employer.

Alberta fall protection regulations

Source: Alberta Occupational Health and Safety Code 2009

Part 9 Fall Protection

139(1) Subject to subsections (3) through (8), an employer must ensure that a worker is protected from falling at a temporary or permanent work area if a worker may fall

(a) a vertical distance of 3 metres or more,

(b) a vertical distance of less than 3 metres if there is an unusual possibility of injury, or (c) into or onto a hazardous substance or object, or through an opening in a work surface.

139(3) To meet the requirement under subsection (1), an employer must install an engineering control such as a guardrail.

139(4) Despite subsection (3), an employer must ensure that a worker at a permanent work area is protected from falling by a guardrail if the worker may fall a vertical distance of more than 1.2 metres and less than 3 metres.

Manitoba fall protection regulation

Source: Manitoba Workplace Safety and Health Act and Regulation 2014

Guardrail system requirements

14.3 Subject to section 14.6, an employer must ensure that a guardrail system is used where there is a risk of a worker falling in any of the circumstances set out in subsection 14.1(1).

Guardrail requirements

14.4(1) An employer must ensure that a guardrail

(a) is at least 900 mm high and not more than 1,060 mm above the working surface, with an intermediate rail at between 450 and 530 mm above the working surface; and

(b) is constructed and secured to resist a static load of 900 N in any direction in which the load may be applied at any point on the top rail and on any intermediate rail.

14.4(2) A guardrail must have a toe board securely fastened to the posts and extending from the surface of the working area to a height of at least 125 mm when there is a risk of falling objects.

14.4(3) If a guardrail is made from wood, it must

(a) be free from splinters and protruding nails; and

(b) have a top and mid rail of at least 38 mm × 89 mm securely supported on posts of at least 38 mm × 89 mm and spaced at not more than 2.4 m.

Temporary guardrail removal

14.5 An employer may temporarily remove a guardrail when it is necessary to do so to facilitate work in the immediate area. The employer must ensure that any worker in the area uses a fall protection system while the guardrail is removed.

WARNING LINE STANDARDS

Control zone

Source:Alberta Occupational Health and Safety Code 2009

Section 161 Control zones

The use of a control zone is an approach to fall protection that places special requirements on workers and work being performed on a nearly level working surface within 2 metres of an unguarded edge from which a worker could fall. Control zones can be used on surfaces having a slope of up to 4 degrees measured from the horizontal.

If a worker works within 2 metres of the control zone i.e. within 4 metres of the unguarded edge, a raised warning ling or equally effective means is required. If a worker works within the control zone, then a travel restraint system must be used. A control zone cannot be used if the level working surface on which work is being performed is less than 4 metres wide. In such circumstances, one of the other methods of fall protection required by the OHS Code must be used.

Work away from unguarded edge

Situations may arise where, on a large flat roof for example, work is performed at a significant distance away from an unguarded edge e.g. at a penthouse near the centre of the roof. With the exception of when workers enter or leave the work area at an unguarded edge, workers have no contact with the edge. Upon accessing the roof, workers must proceed directly to their work area. Under such circumstances, a line defining a control zone is unnecessary, as are the remaining requirements for fall protection that would normally apply at the unguarded edge.

Line defining the control zone

If a worker works within 2 metres of the control zone i.e. within 4 metres of the unguarded edge, a raised warning line or equally effective means of alerting the worker to the unguarded edge is required (see Figure 9.25). The raised warning line or other equally effective means such as barricades must be placed at least 2 metres from the edge. The warning method provides a visual and physical reminder of the presence of the hazard.

For compliance purposes, a raised warning line can consist of ropes, wires or chains, and supporting stanchions, and should be

(a) flagged or marked with highly visible materials at intervals that do not exceed 2 metres (6.5 feet),

(b) rigged and supported so that the lowest point (including sag) is not less than 0.9 metres (34 inches) from the walking or working surface and its highest point is not more than 1.2 metres (45 inches) from the walking or working surface,

(c) attached to each stanchion in such a way that pulling on one section of the line between stanchions will not result in slack being taken up in the adjacent section before the stanchion tips over, and

(d) the rope, wire or chain must have a minimum tensile strength of 2.2 kN (500 lbs).

An "equally effective method" might be a substantial barrier e.g. pile of materials or supplies, tall parapet, building system pipes and ducts, etc. that is positioned between the worker and the unguarded edge, preventing the worker from getting to the edge. Since this substantial barrier is acting as a guardrail, it must at all time be at least 920 millimetres (36 inches) tall while the protected worker is using it.

WARRANTY

Thank you for purchasing this Delta Prevention freestanding fall-protection system. In the event you need to use our warranty service on this product, we refer you to the terms and conditions set out below.

1. STANDARD CONDITIONS

Delta Prevention guarantees that this product will be in good working order during the warranty period. In the event that the product is defective during the warranty period, Delta Prevention will replace the defective product/component free of charge (freight charge will be at the customer's expense).

2. WARRANTY PERIOD

The following table describes the limited warranty period for our products. The warranty begins on the date of purchase by the end customer. Any installation of 12 months or less will be considered temporary. The rental of Delta Prevention products will automatically be considered as a temporary use.

Type of product	Permanent installation	Temporary installation
VSS Classic/VSS Compact Guardrail	10 years	1 year
VSS SafetyLine	10 years	1 year

3. LIMITATIONS

The Delta Prevention warranty does not cover:

- Damage or defects caused by improper use or handling of the product as mentioned in the user manual and/or relevant user documents, including, without limitation, improper storage, falling, excessive impact, corrosion, acidic environment, dirt, water or damage caused by sand.
- Discoloration caused by sunlight or chemicals.
- The use of spare parts that are not supplied by Delta Prevention or that are not compatible with the product.
- Cost incurred by periodic inspections, repairs, spare parts or maintenance caused by normal wear and tear.
- Defects caused by modifications made without Delta Prevention's approval.
- Accidents, disasters or any cause beyond Delta Prevention's control, including but not limited to lightning, water, fire or public disturbance.

ADDITIONAL SERVICES

FALL PROTECTION ANALYSIS

If you want to make your building safer and ensure that it is compliant, we can connect you with a Delta Prevention Certified Distributor who can analyze the falling hazards on your roofs and suggest the necessary equipment.

GET A QUOTE IN 48 HOURS

Let's start the conversation! Contact our customer service experts for a completely free budgetary quote.

ENGINEERING

Upon request, we can produce engineered stamped drawings or installation certification. Contact us for an estimate!

A NORTH AMERICAN NETWORK

Our network of North American distributors ensures fast and efficient service in all regions. Contact us to find the Delta Prevention distributor nearest you!

BECOME A SPECIALIST IN FALL PROTECTION SOLUTIONS

Follow us to see our latest projects, discover our new products, our special discounts and all the events where Delta Prevention showcases its solutions! We look forward to meeting you!

facebook.com/deltaprevention

linkedin.com/company/delta-prevention

delta prévention

deltaprevention.com

QUOTE REQUEST FORM

Tell us about your projects! Give us as much information as possible about the situation to be assessed and our team of experts will be happy to contact you to discuss it.

Company: _____

Address: _____

_____

_____

Your name: _____

Position: _____

Telephone number: _____

E-mail: _____

PRODUCTS:

❏ VSS Compact Guardrail
❏ VSS Classic Guardrail
❏ VSS Safety Line Permanent Warning Line
❏ Guardrail for Access Ladder
❏ Guardrail for Skylight
❏ Guardrail for Roof Access Hatch
❏ Roof Walkway
❏ Other

FEATURES:

Is there a parapet? Yes ❏ No ❏ Type of roof system: _____

PROJECT DESCRIPTION:

_____

_____

_____

_____

SKETCH

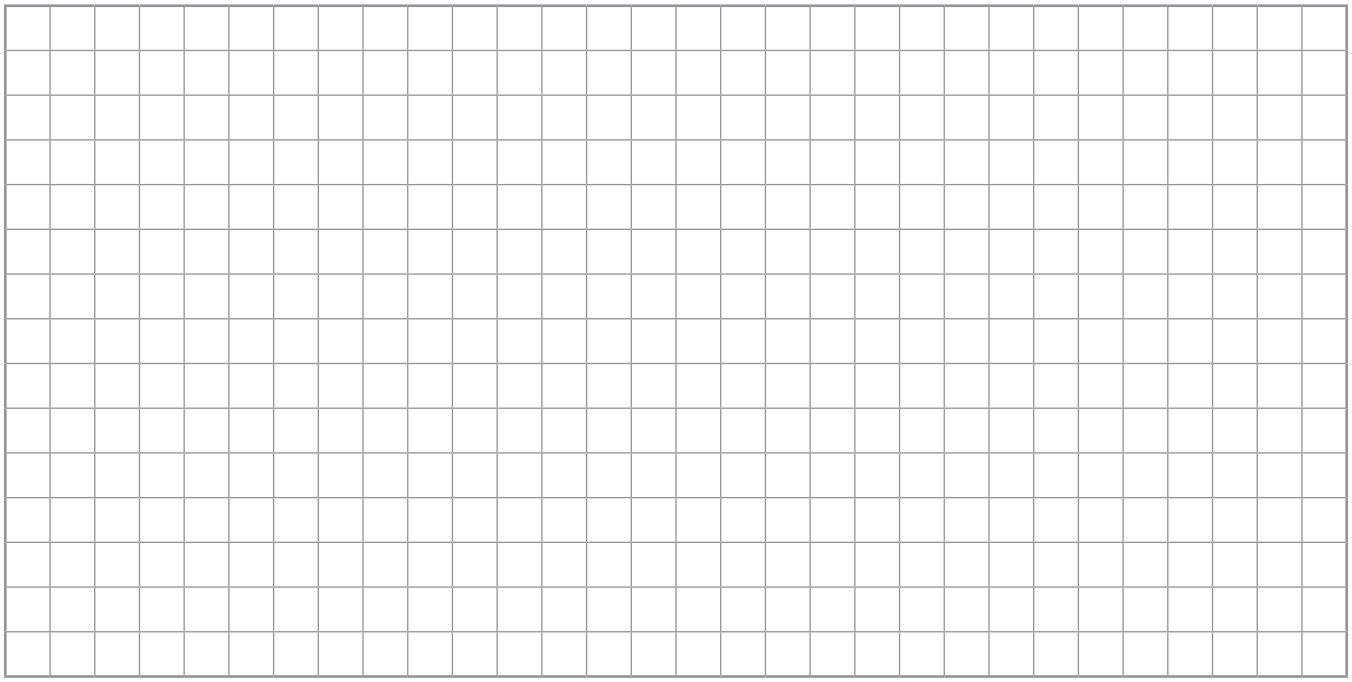

Unit of measurement: inches ❏ meters ❏

VSS
Classic Guardrail

VSS
Compact Guardrail

VSS Safety Line
Permanent Warning Line

Guardrail for Access Ladder

Guardrail for Roof Access Hatch

VSS Compact Guardrail

Guardrail for Skylight

VSS Classic Guardrail

Ladder Stabilizer System

DELTA PREVENTION

1-844-855-4273

info@deltaprevention.com | **www.deltaprevention.com**

4000 place de Java, suite 1, Brossard, QC, J4Y 0C4

© Delta Prevention 2021. All rights reserved.